Miele

Operating instructions

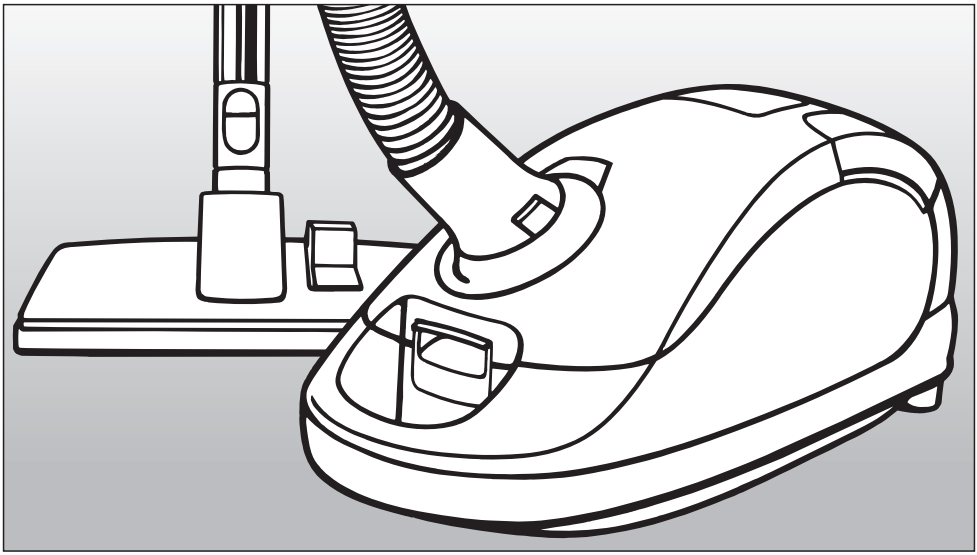

Vacuum cleaner
S 4000

To prevent accidents
and machine damage,
read these instructions
before installation and use.

HS10

en - US, CA

M.-Nr. 07 126 390

Contents

IMPORTANT SAFETY INSTRUCTIONS . . . 3
Guide to the machine . . . 8
Before using the vacuum cleaner . . . 10
Using the included accessories . . . 13
Operation . . . 16
Power cord . . . 16
Turning the vacuum on and off . . . 16
Adjusting the suction . . . 18
Opening the air inlet valve . . . 20
Transport and storage . . . 21
Maintenance and care . . . 22
Purchasing new dustbags and filters . . . 22
When to change the dustbag . . . 23
Replacing the dustbag . . . 24
Replacing the exhaust filter . . . 25
Exhaust filter change indicator . . . 26
Replacing the "SUPER air clean" filter . . . 27
Replacing the "ActiveAirClean" filter and the "Active HEPA" filter . . . 28
Exchanging exhaust filters . . . 29
When to change the dust compartment filter (motor protection) . . . 30
Replacing the dust compartment filter (motor protection) . . . 30
When to change the radio handpiece battery . . . 30
How to change the radio handpiece battery . . . 30
When to change the thread catcher pads of the SBD 450-3 floor tool and upholstery tool . . . 31
Replacing the thread catchers . . . 31
Servicing the floor roller of the SBD 450-3 floor tool . . . 31
Cleaning and care . . . 32
Frequently asked questions . . . 33
Optional accessories . . . 34
Caring for the environment . . . 40

IMPORTANT SAFETY INSTRUCTIONS

When using an electrical appliance, basic precautions should always be followed, including the following:

READ ALL INSTRUCTIONS BEFORE USING THIS APPLIANCE

The manufacturer cannot be held responsible for any damage caused by non-compliance of these Important Safety Instructions.

WARNING-

To reduce the risk of fire, electric shock or injury:

Before using

▶ Check the voltage rating of the vacuum cleaner before connecting the power cord to an electrical outlet. Your power source should correspond with the voltage rating plate located on the underside of the vacuum. Use only household AC outlets. Never use DC power sources. If you are not sure of your home's voltage supply, consult a qualified electrician. Connecting the vacuum cleaner to a higher voltage than indicated in these instructions may result in damage to the vacuum cleaner or injury.

▶ To reduce the risk of electric shock, this appliance has a polarized plug (one blade is wider than the other.) This plug will fit in a polarized outlet only one way. If the plug does not fit fully in the outlet, reverse the plug. If it still does not fit, contact a qualified electrician to install the proper outlet. Do not alter the plug in any way.

▶ A damaged vacuum cleaner can be dangerous. Check the packaging, vacuum cleaner and accessories for any signs of damage. Do not use a damaged appliance.

▶ Do not use with a damaged cord or plug. If the appliance is not working as it should, has been dropped, damaged, left outdoors or submerged in water, bring it to a service center.

▶ The electrical outlet must be fitted with a 15 A fuse.

IMPORTANT SAFETY INSTRUCTIONS

Use

▶ Do not use on people or animals.

▶ Do not use outdoors or on wet surfaces. Only **dry** surfaces should be vacuumed.

▶ Use only as described in this manual with Miele recommended accessories.

▶ The manufacturer cannot be held responsible for damage caused by non-compliance with these Important Safety Instructions. This appliance is intended strictly for household use only.

▶ Do not allow the vacuum cleaner to be used as a toy. Close attention is necessary when used near children.

▶ Never use the vacuum cleaner without the dustbag or filters in place. Otherwise it could be damaged.

▶ If a dustbag is not inserted, the dust compartment lid will not close. Do not force it shut.

▶ Do not leave the vacuum plugged in. Unplug it from the outlet when not in use and before servicing.

▶ On the underside of the vacuum handpiece is a metal insert designed to absorb static electricity. Please make certain that your hand remains around this metal insert when vacuuming.

▶ Persons which lack physical, sensory or mental abilities or experience with the machine should not use it without supervision or instruction by a responsible person.

▶ Unwind the cord completely to aid the vacuum in dissipating heat.

▶ This vacuum should not be used to entrap or retain any hazardous materials.

▶ Do not use the vacuum cleaner to pick up liquids or damp dirt. This could impair the electrical safety of the vacuum cleaner. Wait for freshly shampooed carpets to dry.

▶ Do not vacuum anything that is burning or smoking, such as cigarettes, matches, or hot ashes. The vacuum cleaner could catch fire.

▶ Do not vacuum toner dust. Toner, such as that used in printers and photocopiers can conduct electricity.

▶ Do not use to pick up flammable or combustible liquids, such as gasoline, or use in areas where they may be present. The vacuum cleaner could explode.

▶ Do not vacuum items which are heavy, hard or have sharp edges. They could cause a blockage and damage the appliance.

▶ Do not pull or carry by the cord, use the cord as a handle, close a door on the cord, or pull the cord around sharp edges or corners. Do not run the appliance over the cord. Keep the cord away from heated surfaces.

▶ Do not unplug by pulling on the cord. To unplug, grasp the plug, not the cord.

▶ Do not handle the plug or vacuum with wet hands.

▶ Keep the power cord, hair, loose clothing, fingers and all parts of the body away from openings and moving parts.

▶ Do not place anything into the openings of the vacuum cleaner. Do not use if any openings are blocked; keep them free of dust, lint, hair, or anything that may reduce air flow.

▶ This appliance is equipped with a power cord reel. Hold the plug when rewinding onto cord reel. Do not allow the plug to whip when rewinding.

▶ Turn off all controls before unplugging.

▶ Use extra care when cleaning on stairs.

▶ Floor attachments, accessories and wands must not be used at head level to avoid injury to eyes and ears.

▶ Monitor the dustbag change indicator and inspect all filters regularly. For best performance, the dustbag and filters should be replaced when necessary. A full bag or blocked filter will reduce the vacuum cleaner's suction power. A temperature limiter automatically switches the vacuum cleaner off if it gets too hot, see "Frequently asked questions".

Using accessories

▶ The hose and the telescopic wand contain electrical wires. Do not use the vacuum cleaner if these parts are damaged, cut or punctured. Avoid picking up sharp objects. Danger of electric shock!

▶ Unplug the vacuum when changing accessories, especially the Turbobrush, and Powerbrush.

▶ To avoid the risk of injury when vacuuming with a Miele Power or Turbobrush do not touch the rotating roller brush. Danger of injury.

▶ The socket on the vacuum cleaner (depending on model) must only be used for the Miele Powerbrush specified for use with this appliance.

▶ Danger of injury. The Miele Powerbrush is a motor driven accessory for use only with Miele vacuum cleaners. The vacuum cleaner must not be used with another manufacturer's powerbrush.

▶ Do not use the vacuum without an accessory attached. The rim could be damaged and injuries could result from sharp edges.

▶ Miele dust bags are disposable and intended to be used only once. Do not attempt to reuse. An over stuffed dustbag will reduce the efficiency of the vacuum cleaner.

▶ Only use genuine Miele dustbags with the Miele quality signet and original Miele filters and accessories. Only then will the manufacturer guarantee its safety.

Cleaning, maintenance and repairs

▶ Turn the vacuum cleaner off after each use and before every cleaning / maintenance. Pull the plug from the outlet.

▶ Never submerge the vacuum cleaner in water. Clean only with a dry cloth or slightly damp cloth when disconnected from the mains supply. If moisture gets into the appliance there is a risk of electric shock.

▶ Monitor the dustbag change indicator and inspect all filters regularly. For best performance, the dustbag and filters should be replaced when necessary. A full bag or blocked filter will reduce the vacuum cleaner's suction power. A temperature limiter automatically switches the vacuum cleaner off if it gets too hot, see "Frequently asked questions".

▶ Repairs must only be performed by an authorized service agent in accordance with national and local safety regulations. Unauthorized repairs could cause injury or machine damage. The manufacturer cannot be held responsible for unauthorized work.

▶ If the power cord is damaged it should be replaced along with a new cable reel by Miele Technical Service.

Disposal

▶ Remove the battery from the radio handpiece and recycle it.

▶ Before discarding an old vacuum cleaner, please cut off the power cord and render the plug useless. Ensure the appliance presents no danger to children while being stored for disposal.

FCC and Industry Canada information:

This device complies with part 15 of the FCC Rules. Operation is subject to the following two conditions: (1) This device may not cause harmful interference, and (2) this device must accept any interference received, including interference that may cause undesired operation.

⚠ Warning: Changes or modifications to this unit not expressly approved by the party responsible for compliance could void the user's authority to operate the equipment.

Note:

This equipment has been tested and found to comply with the limits for a Class B digital device, pursuant to Part 15 of the FCC Rules. These limits are designed to provide reasonable protection against harmful interference when the equipment is operated in a residential installation. This equipment generates, uses and can radiate radio frequency energy, and if not installed and used in accordance with the instructions, may cause harmful interference to radio communications. However there is no guarantee that interference will not occur in a particular installation. If this equipment does cause harmful interference to radio or television reception, which can be determined by turning the equipment off and on, the user is encouraged to try to correct the interference by one or more of the following measures:

– Reorient or relocate the receiving antenna

– Increase the separation between the equipment and receiver.

– Connect the equipment into an outlet on a circuit different from that to which the receiver is connected.

– Consult the dealer or an experienced radio/TV technician for help.

SAVE THESE INSTRUCTIONS

Guide to the machine

Some models come standard with a Turbobrush, which is not shown in this figure.

A separate Operating manual is supplied with the vacuum.

① Handpiece (some models may include an air inlet valve) *

② Suction power buttons + / – *

③ Standby switch *

④ LED *

⑤ Locking button

⑥ Accessory clip *

⑦ Telescopic wand release button *

⑧ Dust compartment lid release

⑨ Telescopic wand *

⑩ Dust bag

⑪ Carrying handle

⑫ Floor tool *

⑬ Transport/storage holder

⑭ Dust compartment filter (motor protection)

⑮ Exhaust filter *

⑯ Suction power selector *

⑰ Standby indicator *

⑱ Thermo indicator ⚠ *

⑲ Exhaust filter change indicator (Reset button) *

⑳ Power cord with plug

㉑ Cord rewind switch

㉒ Park-System

㉓ On / Off switch

㉔ Airflow indicator

㉕ Elbow

㉖ Suction hose

The features marked * may vary or not be available depending on your model.

Attaching the suction hose

- Insert the elbow into the suction socket until it clicks. Use the inlet guides to direct insertion.

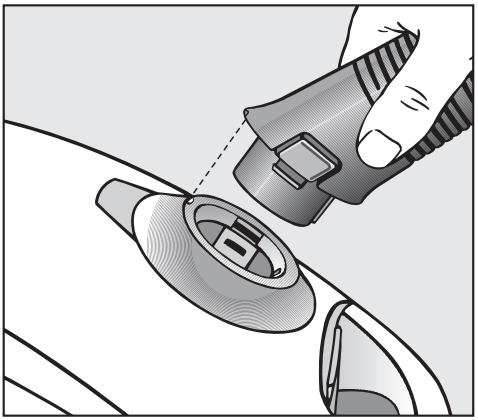

Removing the suction hose

- Press the release buttons at the sides of the elbow and lift the hose from the socket.

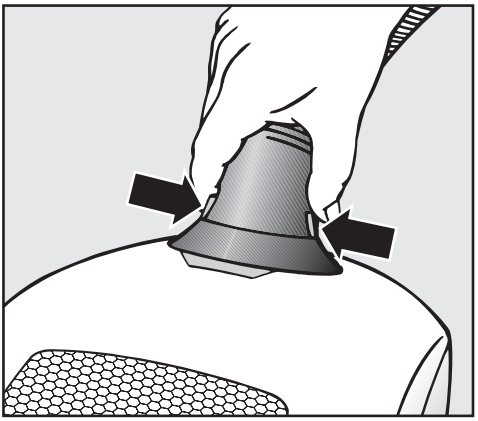

Connecting the handpiece and telescopic wand

- Insert the handpiece into the telescopic wand until it clicks. Use the inlet guides to direct insertion.
- To release the handpiece from the telescopic wand press the locking button (see arrow) and pull the handpiece away from the telescopic wand.

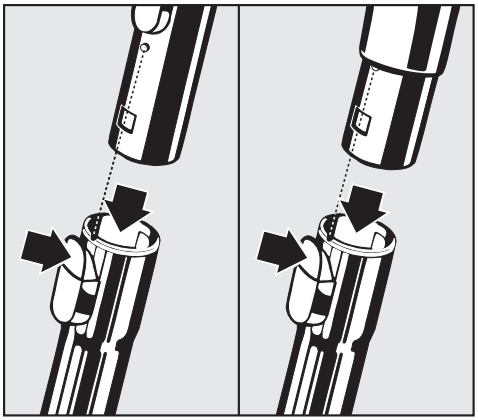

Depending on your model, the vacuum will include one of the following telescopic wands:

– Fitted wand (CDN only)
– Telescopic wand
– XXL telescopic wand

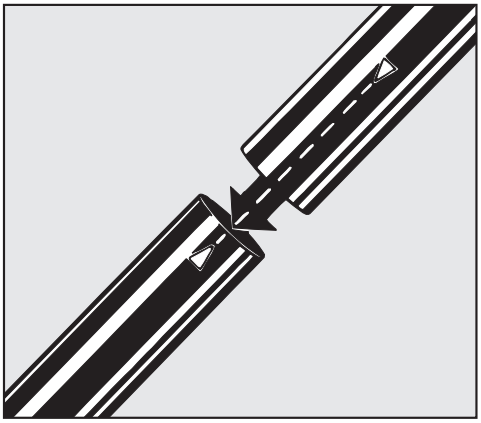

Inserting the fitted wand

Both sections of the telescopic wand have locating arrows to guide insertion.

Adjusting the telescopic wand

One section of the telescopic wand is inside the other and can be adjusted for comfortable vacuuming.

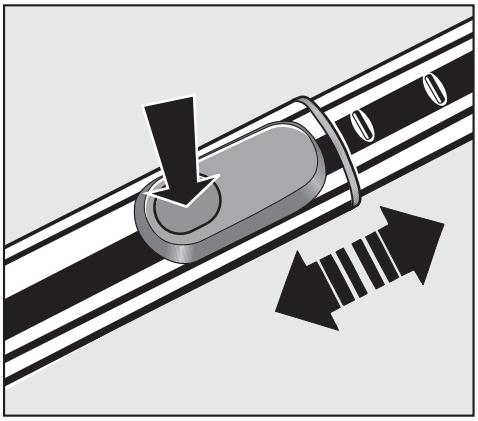

■ Press the telescopic wand release button (see arrow) to release the tubes and adjust to the desired height.

Adjusting the XXL telescopic wand

This telescopic wand consists of three sections which are height-adjustable.

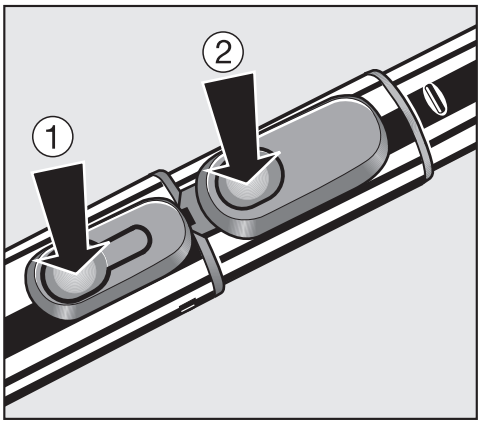

■ Pull and extend the lower section of the wand, ①, until it clicks. Press the release button if you want to retract the lower section again.

■ Press the adjustment button, ②, to release the tubes and adjust to the desired height.

Attaching the floor tool/brush

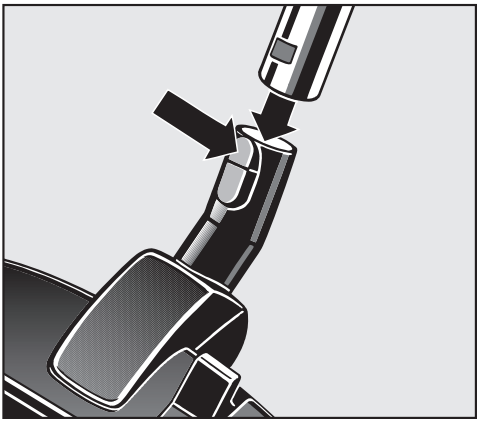

- Insert the wand into the floor brush and twist until it locks with a click.
- To release the floor brush from the telescopic wand, press the locking button (see arrow) and pull the wand out of the floor brush.

Observe the cleaning instructions of the floor manufacturer.

SBB 300-3 Floor brush

The floor brush is suitable for cleaning all hard flooring.

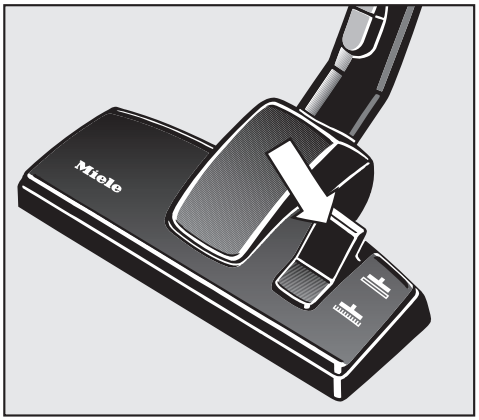

SBD 450-3 Floor tool

The floor tool is suitable for cleaning carpets, rugs, and hard surfaces. For flooring susceptible to scratches, use one of the special Miele floor brushes (see "Optional accessories").

To clean carpets and area rugs

- Press the foot switch marked .

To clean hard flooring

- Press the foot switch marked .

Turbobrush

Some models come with a Turbobrush as an accessory. Please refer to the separate operating instructions for instruction on use and maintenance.

The following accessories are included

① Crevice nozzle

② Dusting brush

③ Upholstery tool

④ Accessory clip for the respective included accessories

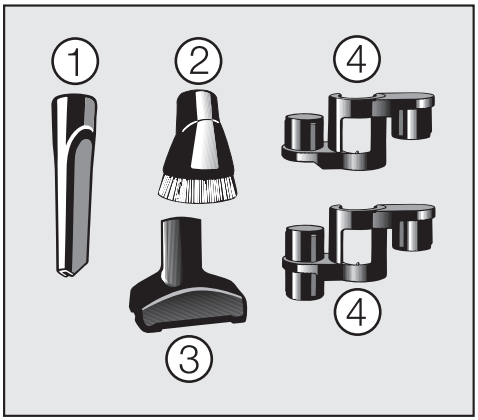

Accessory clip

■ The accessory clip can be attached to the handpiece.

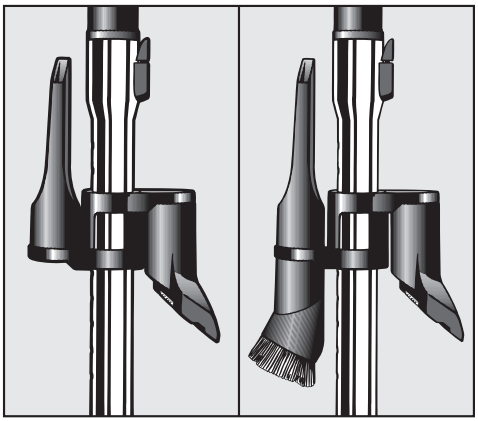

Floor brush SBB 300-3

(depending on model)

For cleaning all hard flooring. Especially suitable for vacuuming niches and tight spaces.

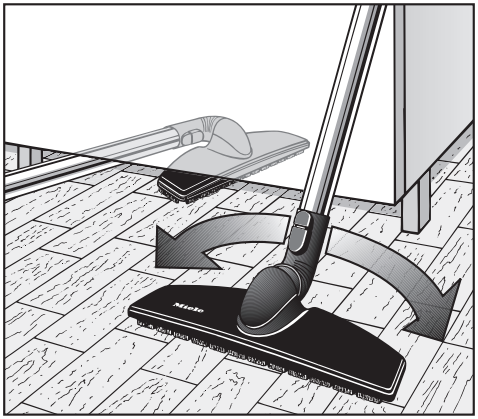

Floor tool SBD 450-3

(depending on model)

The standard floor brush can be used for normal cleaning of carpets, rugs, hard surfaces, carpeted stairs, etc.

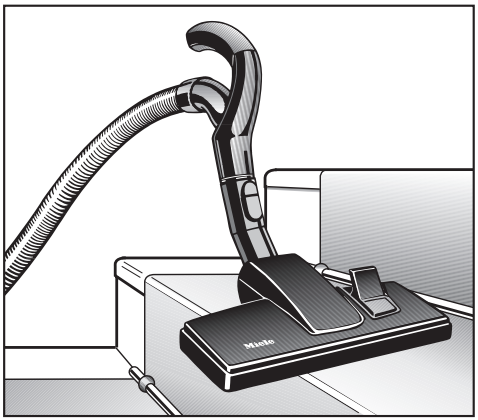

Crevice nozzle

For cleaning in folds, crevices and corners.

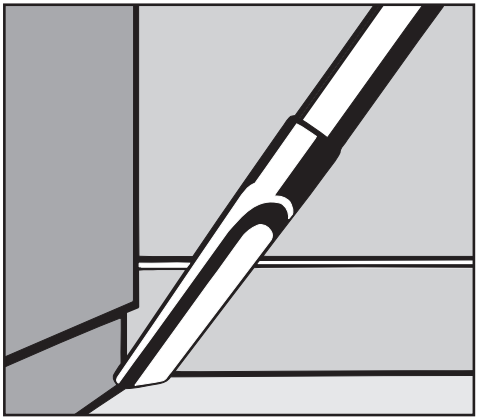

Upholstery nozzle

For cleaning upholstery, mattresses, cushions, curtains, covers, etc.

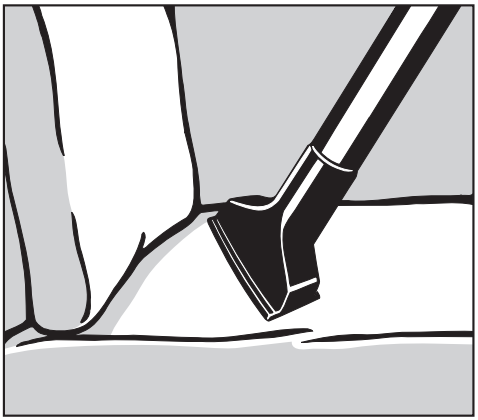

Dust brush with natural bristles

For cleaning moldings, decorative or carved items, etc.

The head of the dusting brush can be swivelled to attain the best cleaning position.

For dusting particularly delicate objects.

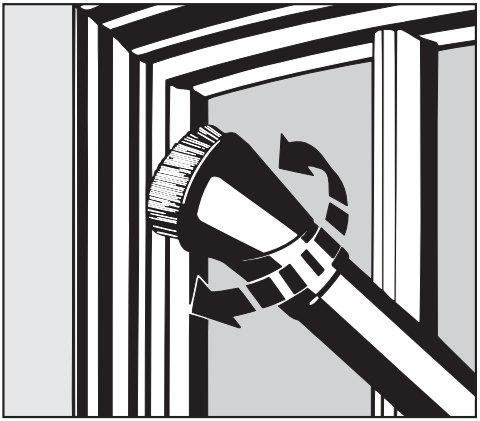

Power cord

⚠ Unwind the cable completely to aid the vacuum in dissipating heat.

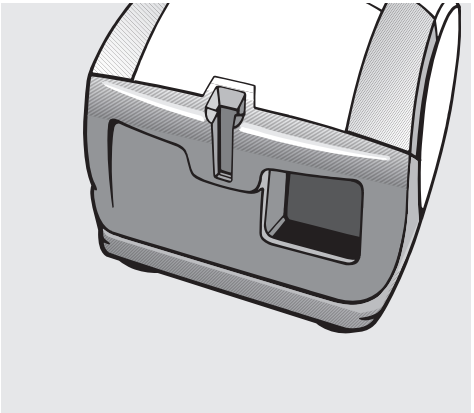

Unwinding

- Hold the plug and pull the power cord out to the required length (maximum 18 ft / 5.5 m).

⚠ To reduce the risk of electric shock, the vacuum has a polarized plug (one blade is wider than the other). This plug will fit in a polarized outlet only one way. If the plug does not fit fully in the outlet, reverse the plug. If it still does not fit, contact a qualified electrician. Do not alter the plug in any way.
Danger of overheating and damage.

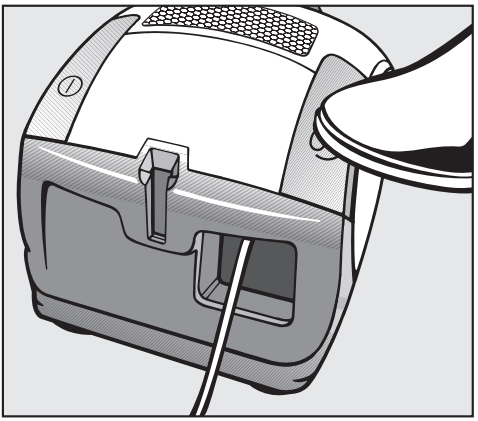

Rewinding

- Unplug the vacuum from the outlet.
- Press the rewind switch briefly and the power cord will rewind automatically.
- Press the rewind switch again to stop the rewinding.
- Hold the plug so that it does not whip around when rewinding.

Turning the vacuum on and off

- Press the On/Off switch.

⚠ Turn off the vacuum and unplug it before performing any maintenance work.

Vacuum cleaner and accessories

External surfaces of the vacuum cleaner and accessories can be cleaned with a slightly damp cloth or with a cleaner suitable for plastics.

⚠ Do not use abrasive, glass or all purpose cleaners! They will damage the surface.

Dust compartment

The dust compartment can, if necessary, be cleaned using a **dry** cloth, dusting brush or a second vacuum to suck out any

Monitor the change dustbag indicator and inspect all filters regularly. Clean or replace them when necessary according to these Operating Instructions.

⚠ Do not submerge the vacuum in water! If moisture gets into the appliance there is the risk of an electric shock.

Some models have a warning light ⚠ which comes on to indicate overheating.

If the vacuum has overheated the temperature limiter automatically turns the vacuum off. Some models also have a warning light ⚠ to indicate that the vacuum has overheated.

This can occur if, for instance, large articles block the suction tube or when the filter bag is full or contains particles of fine dust. A heavily soiled exhaust or dust compartment filter can also be the cause of overheating. Turn off the vacuum cleaner using the On/Off switch.

Unwind the full length of the power cord. Allow the vacuum to cool down for 30 minutes.

After sales service

In the event of a problem that you can not fix yourself, please contact the Miele Service Department.

Optional accessories

Each model may be accessorized with one or several of the following tools.

Turbobrush
STB 205-3

The Turbobrush is intended for cleaning short to medium pile carpeting. It is mechanically driven by the suction power of the vacuum. In addition to dust particles it also removes stubbornly adhered threads, hairs, fluff, etc.

Observe the cleaning instructions of the floor manufacturer.

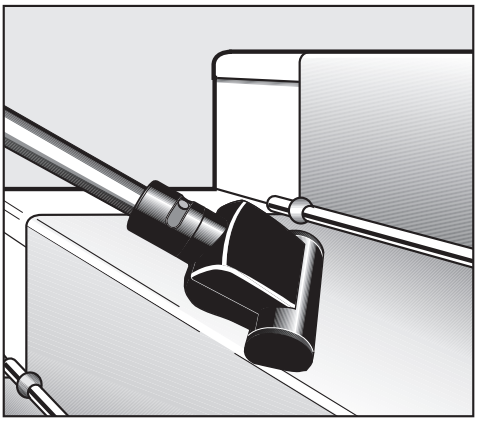

Hand Turbobrush
STB 101

The Hand Turbobrush is intended for vacuuming upholstery, mattresses, car seats, carpeted stairs and other areas inaccessible with the standard Turbobrush.

Hard floor brush
SBB 235-3

To vacuum sturdy hard floors, e.g. tiles and stone floors.

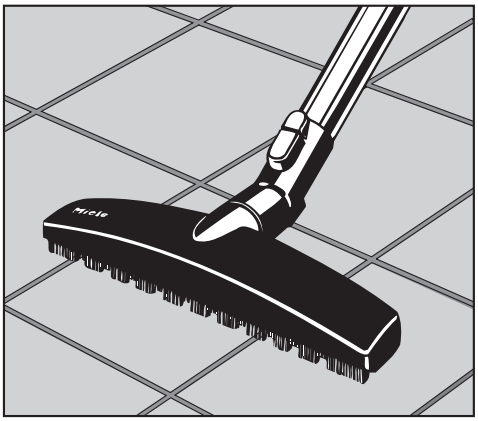

Parquet floor brush
SBB Parquet-3

Special brush with natural bristles intended for cleaning parquet and laminate floors, especially those susceptible to scratching.

The parquet floor brush can be cleaned with the vacuum cleaner using the crevice nozzle if necessary.

Optional accessories

Universal brush

For dusting books, shelves, etc.

Dust brush with natural bristles

For dusting particularly delicate objects.

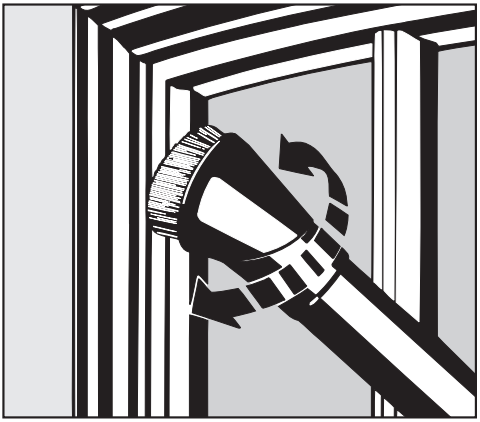

Radiator brush

(only usable with the crevice nozzle)

For cleaning radiators, narrow shelves or crevices.

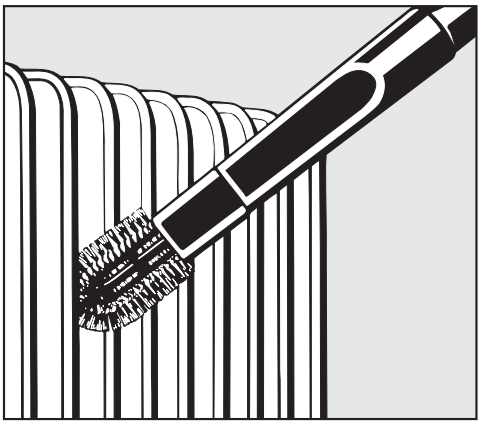

Mattress tool

For cleaning deep crevices, mattresses and upholstery.

Crevice nozzle 12" (300 mm)

For cleaning in folds, crevices, corners, etc.

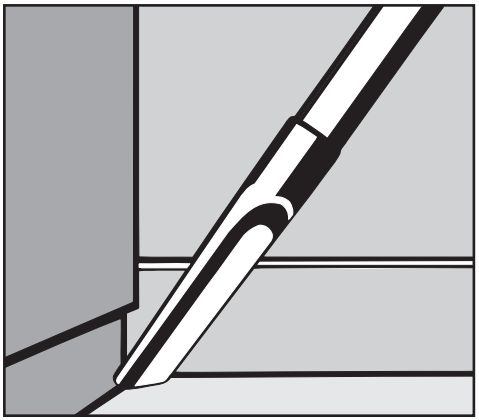

Optional accessories

MicroSet

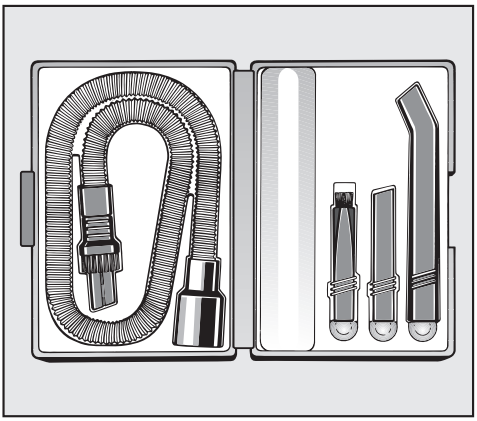

This set is specially designed for cleaning small objects and difficult to reach areas (such as PC keyboards, stereo equipment, carved furniture and ornaments, models, etc). Contents:

– Micro hose with combi nozzle (crevice nozzle and dust brush)

– Micro dust brush

– Micro crevice nozzle

– Extension

CarClean Set Plus

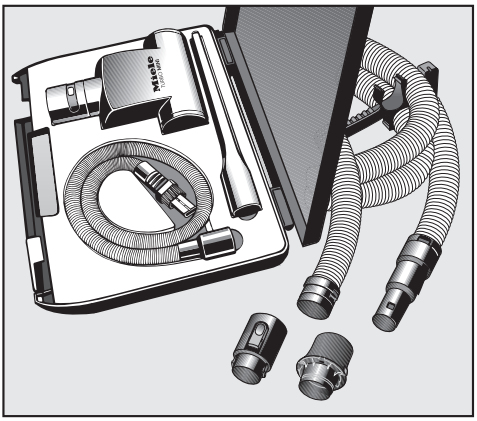

Specially designed for cleaning car interiors.

Accessory set consists of:

– Hand Turbobrush

– Micro-hose with combi nozzle

– Crevice tool 12" (300 mm)

– Accessory carrying case, 10 ft (3 m) long suction hose and holder.

ActiveAirClean filter

A special active charcoal filter which absorbs odors from the dust collected in the dustbag. The "ActiveAirClean" filter can be used in place of the "SUPER air clean" filter. There is no difference in the fine dust performance of the "ActiveAirClean" and the "SUPER air clean" filter.

Active HEPA Filter

The "Active HEPA" filter combines activated charcoal and HEPA filtration in one. The active charcoal layer absorbs odors from the dust collected in the dustbag. Vacuum cleaners equipped with this exhaust filter are particularly suitable for allergy sufferers and those concerned with a high level of hygiene because of its ability to trap respirable particles and allergens.

Filter frame

The filter frame is needed if you would like to exchange a SuperAirClean filter with an Active air Clean or HEPA filter, see "Maintenance and care - Exchanging exhaust filters".

Disposal of the packing materials

The cardboard box and packing materials protect the appliance during shipping. They have been designed to be biodegradable and recyclable.

Ensure that any plastic wrappings, bags, etc. are disposed of safely and kept out of the reach of children. These items pose a danger of suffocation.

Disposing of the dustbag and filters

Genuine Miele dustbags and filters are made of environmentally friendly materials. They can be thrown out with the household trash provided the vacuum cleaner has been used only for normal household dust.

Please have the model and serial number of your appliance available before contacting Technical Service.

Miele

U.S.A.

Miele, Inc.

National Headquarters
9 Independence Way
Princeton, NJ 08540
Phone: 800-843-7231
609-419-9898
Fax: 609-419-4298
www.miele.com

Technical Service & Support Nationwide
Phone: 800-999-1360
Fax: 888-586-8056

TechnicalService@mieleusa.com

Canada

Miele Limited

Headquarters and Showroom
161 Four Valley Drive
Vaughan, ON L4K 4V8
Phone: 800-643-5381
905-660-9936
Fax: 905-532-2290
www.miele.ca
info@miele.ca (general enquiries)
professional@miele.ca (commercial enquiries)

MieleCare National Service
Phone: 800-565-6435
905-532-2272
Fax: 905-532-2292
service@miele.ca (technical enquiries)

All rights reserved/1108

M.-Nr. 07 126 390 / 01

For the most updated manual please see the Miele web site.